VILLAGE OF OAK PARK
INVITATION TO BID
2027 Water & Sewer Repair Parts and Materials
Project #27-103
Issued November 11, 2026

The Village of Oak Park will receive bids for **Water & Sewer Repair Parts and Materials for 2027**, at the Public Works Service Center, at 201 South Boulevard, Oak Park, Illinois 60302.

Bids shall be submitted electronically via e-mail to Daneil.dillett@oak-park.us. Additional information may be obtained by contacting Dan Dillett, Water & Sewer Superintendent at 708-358-5730 or e-mail at Daneil.dillett@oak-park.us .

Bids will be accepted until November 25, 2026, at 3:00p.m.

Bidders must submit their bid on the form included in this Request for Bids.

Upon formal award to the successful Bidder, a Purchase Order will be issued to secure this purchase and the Bidder will enter into a Purchase Price Agreement with the Village.

The Village of Oak Park as a municipality pays neither Federal Excise Tax nor Illinois Retailers Occupational Tax, and therefore these taxes should be excluded from quotations.

The bid will be awarded in whole or in part to the responsible Bidder or Bidders whose bids, conforming to the request for bids, will be most advantageous to the Village; price and other factors considered. Prices shall remain as quoted until December 31, 2027.

The Board of Trustees reserves the right to accept or reject any and all bids or to waive technicalities, or to accept any item of any bid. Additional information is available by contacting Dan Dillett at 708-358-5730 or email at daniel.dillett@oak-park.us.

TO: Dan Dillett
Water & Sewer Superintendent
Department of Public Works
201 South Blvd. Oak Park, IL 60302

Regarding FOIA Requirements

By submitting a bid or otherwise responding in any way to this request for bids, the bidder acknowledges the following:

1. This public body is subject to the Freedom of Information Act, 5 ILCS 140/1, et seq. ("FOIA"), and any and all information submitted by the bidder to this public body is subject to disclosure to third parties in accordance with FOIA.

2. If the bidder intends for the public body to withhold the bidder's trade secrets, commercial information, or financial information from disclosure to a third party in response to a FOIA request, the bidder must include with its bid submittal a written notification specifically identifying such information, along with a statement that disclosure of such information will cause competitive harm to the bidder, as provided by FOIA Section 7(1)(g), 5 ILCS 140/7(1)(g). Any content not so marked by the bidder at the time of bid submittal will be presumed to be open to public inspection. The bidder may be required to substantiate the basis for its claims at a later time.

3. Notwithstanding timely notice received from a bidder in accordance with Section 7(1)(g), the public body reserves the right, in its sole discretion and subject only to applicable law, to withhold or release the subject information in response to a FOIA request.

2027 VILLAGE OF OAK PARK WATER SEWER PARTS PRICE LIST

INSTRUCTIONS

1. **Bids Due Wednesday, November 25 at 3:00 P.M.** Pricing to be held until December 31, 2027.
2. Quanitities are estimated. Orders for parts will be on an as needed basis. Open Purchase Orders will be issued based on 2027 anticipated purchases.
3. FOB Oak Park Public Works Department, 201 South Blvd., Oak Park, IL.
4. If an item is not available, leave line blank or write in a substitution item for consideration.
5. Where appropriate, write in the Make and Model of the item quoted. Non-compliant items, may be accepted or rejected, at the discretion on the Village.
6. Complete contact information at the end of the bid form. Write firm name on each page of the bid where indicated.
7. Items manufactured in the United States will be given preference during the evaluation and selection process.

PART	SPECIFICATIONS	Approx quantity	Units	Make and/or Model	UNIT PRICE	COST
FIRE HYDRANT	**5'-6" bury hydrant with auxillary valve attached**					
1. The hydrant shall be American Flow Control's Waterous Pacer Hydrant Traffic Model WB-67-250. The hydrants shall come painted, with the nozzle section painted Waterous Standard red - M4104. The hydrant shall have a 6-inch internal connection, and a 6-inch flanged base connection. The Village of Oak Park requires two 2 ½ " hose nozzles with one 4" pumper nozzle with no cap chains. The nozzles shall open counter clockwise. The bury depth shall be 5'-6". The auxiliary valve shall be the American Flow Control's 6-Inch diameter Resilient Wedge Gate Valve rated for 250 p.s.i.g. cold water working pressure, have a ductile iron body with a modified wedge disc, have flanged and mechanical joint ends, and be a non-rising stem type valve. The valve shall be manufactured in accordance with AWWA Standard C515. Both mechanical joint ends shall comply with AWWA Standard C111 and ANSI Standard A21.11 specifications. Epoxy coatings shall comply with AWWA C550.		10	Each	_____	_____	_____
2. The hydrant shall be Mueller's 4-1/2" A421 & 5-1/4" A423 Super Centurion w/ MJ Shoe Assembly & Storz Connection. The hydrants shall come painted, with the nozzle section painted standard red. Please see attached spec sheet for further details.		10	Each	_____	_____	_____
DUCTILE IRON WATER MAIN	**ANSI/AWWA C151/A21.51, Class 52.** Linear Foot price per 20 foot stick of pipe.					
4" Mechanical Joint	ANSI/AWWA C111/A21.11	20	Lin. Ft.	_____	_____	_____
6" Mechanical Joint	ANSI/AWWA C111/A21.11	20	Lin. Ft.	_____	_____	_____
8" Mechanical Joint	ANSI/AWWA C111/A21.11	20	Lin. Ft.	_____	_____	_____
10" Mechanical Joint	ANSI/AWWA C111/A21.11	20	Lin. Ft.	_____	_____	_____
12" Mechanical Joint	ANSI/AWWA C111/A21.11	20	Lin. Ft.	_____	_____	_____
14" Mechanical Joint	ANSI/AWWA C111/A21.11	20	Lin. Ft.	_____	_____	_____
16" Mechanical Joint	ANSI/AWWA C111/A21.11	20	Lin. Ft.	_____	_____	_____

2027 VILLAGE OF OAK PARK WATER SEWER PARTS PRICE LIST

PART	SPECIFICATIONS	Approx quantity	Units	Make and/or Model	UNIT PRICE	COST
CUT-IN SLEEVE	MJ w/duck tip gasket with bolts					
6" Diameter		4	Each			
8" Diameter		2	Each			
10" Diameter		1	Each			
12" Diameter		1	Each			
Mechanical Joint Sleeves	Class 350					
6" Diameter		4	Each			
8" Diameter		2	Each			
10" Diameter		2	Each			
12" Diameter		2	Each			
14" Diameter		2	Each			
16" Diameter		1	Each			
Mega-Lug Retaining Glands (complete)						
6" Diameter		4	Each			
8" Diameter		4	Each			
10" Diameter		4	Each			
12" Diameter		2	Each			
14" Diameter		2	Each			
16" Diameter		1	Each			
Resiliant Wedge Gate Valves	MJ x MJ epoxy coated w/ stainless bolts					
3" Diameter		1	Each			
4" Diameter		1	Each			
6" Diameter		4	Each			
8" Diameter		2	Each			

2027 VILLAGE OF OAK PARK WATER SEWER PARTS PRICE LIST

10" Diameter		1	Each			
12" Diameter		1	Each			

PART	SPECIFICATIONS	Approx quantity	Units	Make and/or Model	UNIT PRICE	COST
WATER MAIN REPAIR SLEEVES						
Smith & Blair (Dia. x L)	Full circle stainless steel cast/ductile O.D. range					
4"x12"		2	Each			
6" x 8"		4	Each			
6" x 12"		4	Each			
6" x 15"		4	Each			
6" x 20"		2	Each			
6" x 24"		1	Each			
6" x 30"		1	Each			
8" x 8"		4	Each			
8" x 12"		4	Each			
8" x 15"		4	Each			
8" x 20"		1	Each			
8" x 30"		1	Each			
10" x 8"		2	Each			
10" x 12"		2	Each			
10" x 15"		4	Each			
10" x 24"		4	Each			
12" x 12"		2	Each			
12" x 15"		2	Each			
12" x 24"		2	Each			
12" x 30"		2	Each			
14" x 24"		2	Each			
14 x 30"		2	Each			
16" x 20"		2	Each			
16" x 30"		2	Each			

18" x 30"		2	Each			

PART	SPECIFICATIONS	Approx quantity	Units	Make and/or Model	UNIT PRICE	COST
Abandon Service Sleeve						
Smith & Blair, Ford, or JCM (Sleeve Dia. x Tap Dia.)	Full circle stainless steel - JCM Model 159, Robar Model 6636AS or approved equal. Bolt bracket style. Rated to 150 PSI min.)					
6" - 3" outlet		2	Each			
8" - 3" outlet		2	Each			
10" - 3" outlet		2	Each			
12" - 3" outlet		2	Each			
6" - 4" outlet		2	Each			
8" - 4" outlet		2	Each			
10" - 4" outlet		2	Each			
12" - 4" outlet		2	Each			
WATERMAIN TAPPING SLEEVE						
Smith & Blair (Dia. x L)	Full circle stainless steel cast/ductile O.D. rated to 150 PSI minimum					
6" x 12" - 1" tap		2	Each			
6" x 12" - 1.5" tap		2	Each			
6" x 12" - 2" tap		2	Each			
8" x 8" - 1" tap		2	Each			
8" x 12" - 1" tap		2	Each			
8" x 15" - 1" tap		2	Each			
8" x 12" - 1.5" tap		2	Each			
8" x 12" - 2" tap		2	Each			
10" x 12" - 1" tap		2	Each			
10" x 15" - 1" tap		2	Each			
10" x 12" - 1.5" tap		2	Each			
10" x 12" - 2" tap		2	Each			

2027 VILLAGE OF OAK PARK WATER SEWER PARTS PRICE LIST

PART	SPECIFICATIONS	Approx quantity	Units	Make and/or Model	UNIT PRICE	COST
tapping sleeves (continued)						
12" x 12" - 1" tap		2	Each			
12" x 12" - 1.5" tap		2	Each			
12" x 12" - 2" tap		2	Each			
16" x 12" - 1" tap		2	Each			
16" x 20" - 1" tap		2	Each			
16" x 12" - 1.5" tap		2	Each			
16" x 20" - 1.5" tap		2	Each			
16" x 12" - 2" tap		2	Each			
16" x 20" - 2" tap		2	Each			
VALVE BOXES						
complete box	two (2) piece - 5 1/4 shaft screw type	6	Each			
standard 5 1/4 drop lid		6	Each			
BRASS						
Ford, AY Mcdonald or Mueller (specify)	Lead free brass					
roundways (Curb Stop)	full ball valve - Compression x compression fittings					
1"		2	Each			
1.5"		2	Each			
2"		2	Each			
1"	full ball valve -flare x flare fittings	2	Each			
1.5"		2	Each			
2"		2	Each			
corporation cocks	full ball valve - 300 PSI Rated					
1"	AWWA x compression fittings	45	Each			
1.5"	AWWA x compression fittings	45	Each			
2"	AWWA x compression fittings	7	Each			

2027 VILLAGE OF OAK PARK WATER SEWER PARTS PRICE LIST

PART	SPECIFICATIONS	Approx quantity	Units	Make and/or Model	UNIT PRICE	COST
corporation cocks(cont.)						
1"	AWWA x flare fittings	40	Each			
1.5"	AWWA x flare fittings	10	Each			
2"	AWWA x flare fittings	7	Each			
Elbows - 1/8 Bend Swivel	**AYMcD# 74750S**					
1"	Swivel Female Flare x Flare	25	Each			
1.5"	Swivel Female Flare x Flare	12	Each			
2"	Swivel Female Flare x Flare	3	Each			
Elbows - 1/8 Bend Swivel	**AYMcD# 74750SQ**					
1"	Swivel Female Flare x Compression	25	Each			
1.5"	Swivel Female Flare x Compression	12	Each			
2"	Swivel Female Flare x Compression	3	Each			
LEAD PACKS	Ford Fittings, or approved equal					
5/8" S x 1" copper		10	Each			
3/4" XS x 1" copper		30	Each			
1" XXS x 1" copper		8	Each			
1.5" XS x 1.5" copper		10	Each			
2" XS x 2" copper		10	Each			
COPPER TUBING	copper will be in rolls TYPE K					
1" x 100'	per foot* (100ft rolls)	500	Lin. Ft.			
1" x 60'	per foot* (60 ft rolls)	540	Lin. Ft.			
1.5" x 60'	per foot* (60 ft rolls)	600	Lin. Ft.			
2" x 40'	per foot* (40 ft rolls)	200	Lin. Ft.			

2027 VILLAGE OF OAK PARK WATER SEWER PARTS PRICE LIST

PART	SPECIFICATIONS	Approx quantity	Units	Make and/or Model	UNIT PRICE	COST
B-BOXES						
CAST IRON with threaded bushing						
Minneapolis Style #5615 AYMcD, 5 1/2' with 2" x 1.5" Black Hex Bushing		150	Each			
Curb Box Repair Lid, 3"	Trumbull #367-4283, Brass Pentagon	20	Each			
Hymax2 Wide Range Couplers	Manufactured by Krausz USA					
4"		4	Each			
6"		22	Each			
8"		16	Each			
10"		8	Each			
12"		4	Each			
MaxAdaptor Couplings						
MAX 6	6" CL/DI/AC/CI/PL to 6" CL/DI/AC/CI/PL	12	Each			
MAX 6 Oversize	6" CL/DI/AC/CI/PL to 6" CL/DI/AC/CI/PL	12	Each			
MAX 7	6" CL/CONC or 8" CI/PL to Same	8	Each			
MAX 8	8" CL/DI/AC/CI/PL to 8" CL/DI/AC/CI/PL	8	Each			
MAX 9	8" CL/CONC or 10" DI/AC/CI/PL to Same	4	Each			
MAX 10	10" CL/DI/AC/CI/PL to 10" CL/DI/AC/CI/PL	6	Each			
MAX 12	12" CL/DI/AC/CI/PL to 12" CL/DI/AC/CI/PL	5	Each			
PVC SEWER PIPE	Integral bell joint (ASTM D3212) w/ gasket (ASTM F477)					
6"	SDR -26 ASTM - 3034	400	Lin. Ft.			
8"	SDR -26 ASTM - 3034	120	Lin. Ft.			
10"	SDR -26 ASTM - 3034	80	Lin. Ft.			
12"	SDR -26 ASTM - 3034	60	Lin. Ft.			

2027 VILLAGE OF OAK PARK WATER SEWER PARTS PRICE LIST

PART	SPECIFICATIONS	Approx quantity	Units	Make and/or Model	UNIT PRICE	COST
PVC Fittings	Integral bell joint (ASTM D3212) w/ gasket (ASTM F477)					
6" - 45 degree	SDR 26	16	Each			
6" - 22 degree	SDR 26	16	Each			
6" - 11 degree	SDR 26	16	Each			
8" - 45 degree	SDR 26	10	Each			
8" - 22 degree	SDR 26	10	Each			
8" - 11 degree	SDR 26	10	Each			
10" - 45 degree	SDR 26	10	Each			
10" - 22 degree	SDR 26	10	Each			
10" - 11 degree	SDR 26	10	Each			
PVC Fittings (cont.)						
12" - 45 degree	SDR 26	10	Each			
12" - 22 degree	SDR 26	10	Each			
12" - 11 degree	SDR 26	10	Each			
6" - 45 degree street	SDR 26	16	Each			
6" - 22 degree street	SDR 26	16	Each			
6" - 11 degree street	SDR 26	16	Each			
8" - 45 degree street	SDR 26	10	Each			
8" - 22 degree street	SDR 26	10	Each			
8" - 11 degree street	SDR 26	10	Each			
10" - 45 degree street	SDR 26	10	Each			
10" - 22 degree street	SDR 26	10	Each			
10" - 11 degree street	SDR 26	10	Each			
12" - 45 degree street	SDR 26	10	Each			

2027 VILLAGE OF OAK PARK WATER SEWER PARTS PRICE LIST

12" - 22 degree street	SDR 26	10	Each			
12" - 11 degree street	SDR 26	10	Each			

RUBBER SEWER REPAIR COUPLINGS

Shearless type with stainless steel bands

6"	clay to plastic or CI	30	Each			
6"	plastic to plastic or CI	10	Each			
8"	clay to plastic or CI	12	Each			
8"	plastic to plastic or CI	8	Each			
10"	clay to plastic or CI	8	Each			
10"	plastic to plastic or CI	6	Each			
12"	clay to plastic or CI	6	Each			
12"	plastic to plastic or CI	4	Each			
PART	**SPECIFICATIONS**	**Approx quantity**	**Units**	**Make and/or Model**	**UNIT PRICE**	**COST**
Zinc Anode Caps	6 OZ. (Large)					
5/8" x 11		100	Each			
3/4" x 10		50	Each			

Meter Couplings

5/8" x 1/2" x 2.38"	No Lead Brass	100	Each			
3/4" x 3/4" x 2.50"	No Lead Brass	600	Each			
1" x 1" x 3"	No Lead Brass	400	Each			
5/8" Meter Gasket	Neoprene Rubber, 1/8" thick (100/bag)	25	Bag			
3/4" Meter Gasket	Neoprene Rubber, 1/8" thick (100/bag)	30	Bag			
1" Meter Gasket	Neoprene Rubber, 1/8" thick (100/bag)	20	Bag			
Oval Flange Kits, 1-1/2"	#7610kit	30	Each			
Oval Flange Kits, 2"	#7610kit	20	Each			
Oval Flange Gaskets, 1-1/2"	Neoprene Rubber, 1/8" thick	40	Pair			
Oval Flange Gaskets, 2"	Neoprene Rubber, 1/8" thick	30	Pair			

Adjusting Rings

1"	Rubber Adjusting Ring	20	Each			
2"	Concrete Adjusting Ring	20	Each			

2027 VILLAGE OF OAK PARK WATER SEWER PARTS PRICE LIST

3"	Concrete Adjusting Ring	20	Each	_____	_____	_____
4"	Concrete Adjusting Ring	20	Each	_____	_____	_____
6"	Concrete Adjusting Ring	20	Each	_____	_____	_____

Cones & Sections

48" x 1'6" Offset Cone		20	Each	_____	_____	_____
36" x 2'4" Offset Cone		20	Each	_____	_____	_____
36" x 3'0" Base Section		20	Each	_____	_____	_____
36" x 3'0" Riser Section		20	Each	_____	_____	_____

Frames

9" Extra Heavy Duty Chicago Frame		20	Each	_____	_____	_____
7" Extra Heavy Duty Chicago Frame		20	Each	_____	_____	_____

Additional Parts & Materials

Hydraulic Green Cement	5 Gallon Hydraulic Green Cement	20	Each	_____	_____	_____
Cement Bricks	720 per pallet	2	Each	_____	_____	_____

Company Name: _____

Address: _____

Date: _____

Signature: _____

Printed name: _____

Email: _____

Phone: _____

Submit Pricing To:

Dan Dillett
Oak Park Public Works
201 South Boulevard
Oak Park, IL 60302

Via E-mail:
daniel.dillett@oak-park.us

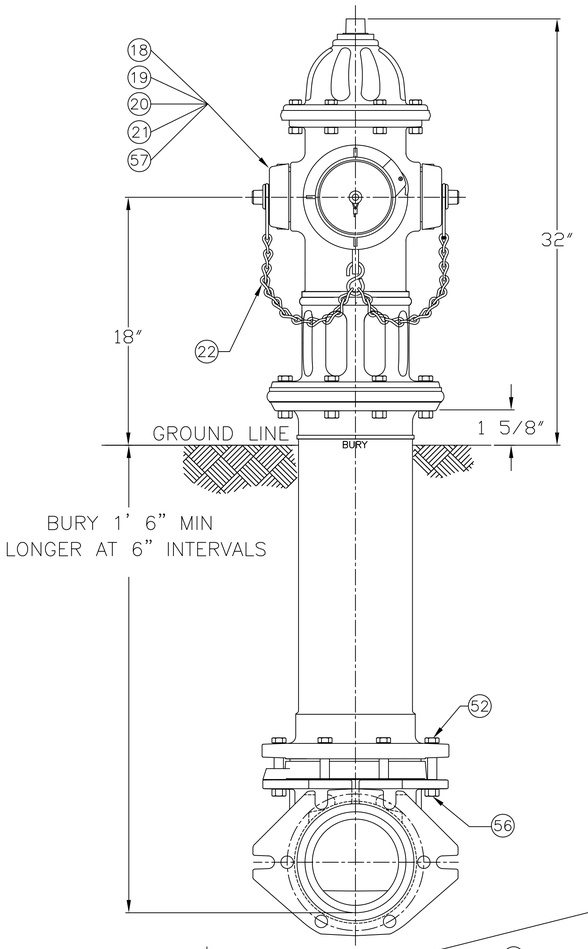

PARTS LIST						
ITEM	DESCRIPTION	REQ'D	MATERIAL	A.S.T.M.	CURRENT MATERIAL DESCRIPTION	ALTERNATE STANDARD (G)
1	OPERATING NUT	1	BRONZE	B-62	ALLOY C83600	B584 C87850 OR C87600
2	WIPER RING	1	RUBBER	D-2000	EPDM	
3	HOLD DOWN NUT O-RING	1	RUBBER	D-2000	BUNA N	
4	HOLD DOWN NUT	1	BRONZE	B-62	ALLOY C83600	B584 C87850 OR C87600
5	BONNET O-RING	1	RUBBER	D-2000	BUNA N	
6	ANTI-FRICTION WASHER	1	CELCON		GRADE M90-04	
7	OIL FILLER PLUG	1	BRASS	B-16	ALLOY 360	
8	BONNET	1	CAST IRON	A-126	CLASS B	
9	BONNET HEX CAP SCREW	8	STEEL	SAE J429	GR 5 GALVANIZED	
10	TOP UPPER BARREL O-RING	1	RUBBER	D-2000	BUNA N	
11	UPPER STEM	1	CARBON STEEL	A-576	GR 1144T	
12	STEM O-RING	1	RUBBER	D-2000	BUNA N	
13	GASKET	1	RUBBER	D-2000		
14	5" STORZ PUMPER NOZZLE	1	BRASS	B-763	C99500	
15	STORZ CAP CABLE	1	STAINLESS STEEL			
16	PUMPER NOZZLE O-RING	1	RUBBER	D-2000	BUNA N	
17	5" STORZ PUMPER CAP	1	ALUMINUM			
18	HOSE NOZZLE	2	BRASS	B-584	ALLOY C89833	B584 C87850 OR C87600
19	HOSE NOZZLE CAP GASKET	2	RUBBER	D-2000	NEOPRENE	
20	HOSE NOZZLE O-RING	2	RUBBER	D-2000	BUNA N	
21	HOSE NOZZLE CAP	2	CAST IRON	A-126	CLASS B	
22	CAP CHAIN	2	STEEL		ELECTRO GALV.	
23	CHAIN HOOK	1	STEEL		ELECTRO GALV.	
24	UPPER BARREL	1	CAST IRON	A-126	CLASS B	
25	TRAFFIC STEM COUPLING	1	STAINLESS STEEL	A-890	1.5% SILICON MAX.	
26	TRAFFIC FLANGE HEX CAP SCREW	8	STEEL	SAE J429	GR 5 GALVANIZED	
27	BOTTOM UPPER BARREL O-RING	1	RUBBER	D-2000	BUNA N	
28	TRAFFIC FLANGE	1	CAST IRON	A-126	CLASS B	
29	REUSABLE COTTER PIN	2	STAINLESS STEEL		18-8	
30	CLEVIS PIN	2	STAINLESS STEEL	A-276	300 SERIES	

SEE CAT. RECORD FOR RESPECTIVE PARTS OR SUB. ASS'YS

ITEM	DESCRIPTION	REQ'D	MATERIAL	A.S.T.M.	CURRENT MATERIAL DESCRIPTION	ALTERNATE STANDARD (G)
31	LOWER STEM	1	CARBON STEEL	A-576	GRADE 1144T	
32	LOWER BARREL	1	CAST IRON	A-126	CLASS B	
33	STEM PIN	1	STAINLESS STEEL	A-276	300 SERIES	
34	DRAIN VALVE FACING	2	H.D. POLYETHYLENE		LS 5660-00	
35	DRAIN VALVE FACING SCREW	4	STAINLESS STEEL	A-276	300 SERIES	
36	UPPER VALVE PLATE	1	BRASS	B-584	ALLOY C89833	B584 C87850 OR C87600
37	BOTTOM SEAT O-RING	1	RUBBER	D-2000	BUNA N	
38	DRAIN RING	1	BRONZE	B-62	ALLOY C83600	B584 C87850 OR C87600
39	SEAT RING	1	BRASS	B-584	ALLOY C89833	B584 C87850 OR C87600
40	DRAIN RING HOUSING	1	CAST IRON	A-126	CLASS B	
41	ENCAPSULATED MAIN VALVE	1	RUBBER	D-2000	NATURAL	
42	LOWER VALVE PLATE	1	CAST IRON	A-126	CLASS B	
43	LOCK WASHER	1	STAINLESS STEEL	A-276	304	
44	VALVE NUT	1	CAST IRON	A-126	CLASS B	
45	VALVE NUT SEAL	1	RUBBER		NATURAL	
46	BONNET HEX NUT	8	STEEL	SAE J995	GR 8 GALVANIZED	
47	STEM O-RING	2	RUBBER	D-2000	BUNA N	
48	TRAFFIC FLANGE HEX NUT	8	STEEL	SAE J995	GR 5 GALVANIZED	
49	DRAIN RING HOUSING O-RING	1	RUBBER	D-2000	BUNA N	
50	SLEEVE	1	COPPER	B-75	ALLOY 122	
51	UPPER STEM PIN	1	STAINLESS STEEL	A-276	303	
52	SHOE HEX CAP SCREW	6	STEEL	SAE J429	GR 5 GALVANIZED	
53	SHOE	1	DUCTILE IRON	A536	GR 65-45-12	GR 70-50-05
* 54	BURY TAG	1	STAINLESS STEEL	A-240	304	
55	TOP SEAT O-RING	1	RUBBER	D-2000	BUNA N	
56	SHOE HEX NUT	6	STEEL	SAE J995	GR 5 GALVANIZED	
57	NOZZLE LOCK	2	STAINLESS STEEL	A-276	305 OR 410	

*NOT SHOWN

OPEN LEFT
APPROXIMATELY 17 1/4 TURNS TO OPEN

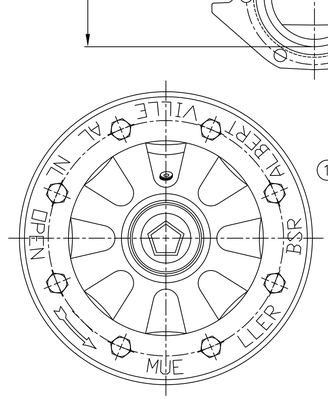

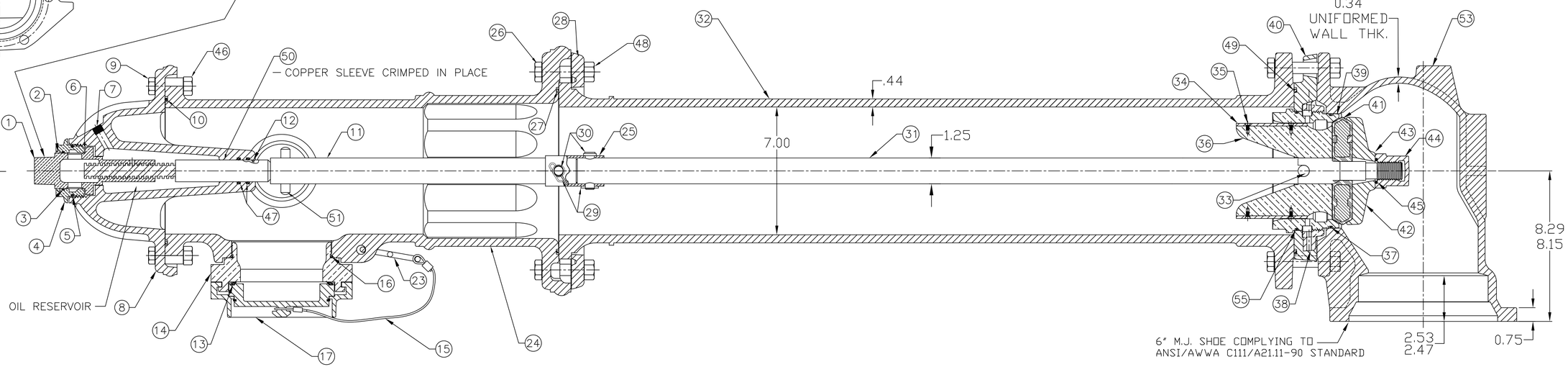

REV.	DESCRIPTION	REF.	DRFT'R	CHK'R	APP	DATE
G	ADD ALTERNATE STANDARD	E05200	ANC			2-3-23
F	UPDATE TO 2019 HYDRANT REFRESH	E04766	ANC	JBC	JBC	8-25-20
E	REVISE ITEMS 9, 26, 46, 48, 52, & 53		ANC			1-20-16
D	REVISE ITEMS 1, 4, 18, 36, 38, & 39		JMG			11-8-13
C	REVISE MATERIAL ON ITEM #14		ANC			1-21-13
B	REVISE ITEMS #11 & 31		MRG			2-27-12
A	REVISE ITEMS # 11 & 31		ANC			11-20-09

DWG. FH 133

4 1/2" A421 & 5 1/4" A423 SUPER CENTURION "250" W/ TWO HOSE NOZZLES
& ONE STORZ NOZZLE – 250 P.S.I. W.P.– 500 P.S.I. TEST, 2019 STYLE.

A/C (MILLIMETER) / INCH	TOLERANCES – MACHINING	THIRD ANGLE PROJECTION	
INITIAL RELEASE	UNLESS OTHERWISE NOTED		
DRFT'R SMC 5-18-06	BREAK EDGES	FINISH SURFACES	PURCH. / FINISH
CHK'R JEH 5-18-06	MACH. .006/.016	125	
APP JEH 5-18-06	FRACTIONS ±1/64	DECIMALS 2 PL ±.025 3 PL ±	ANGLES ±1°	REF. NO. / SCALE N.T.S.
E.O. NUMBER			STK. NO.
MUELLER	MAT'L. SEE TABLE		
	DESCR. 4 1/2" A421 & 5 1/4" A423 SUPER CENTURION W/ MJ SHOE ASSEMBLY & STORZ CONNECTION	REVISION G	NUMBER FH 133
			SHEET 1 OF 1